Loan Container Incoming Inspection

VADER® Pedicle System/VADER®one Pedicle System
(open approach)

Overview Instrumentation

VADER® Pedicle System 1/2

42-851-1

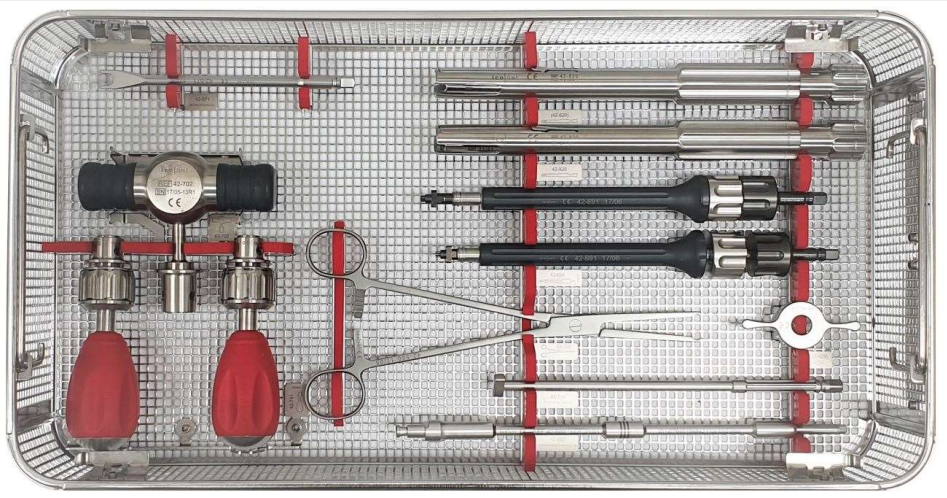

42-851-3

VADER® Pedicle System 2/2

42-861-1

42-861-3

Overview Inspection Aids

- **Screw Ø 5.5 × 45 mm (H286)**
- **Nut Screw (H287)**
- **K-Wire, Threaded Ø 1.6 (H289)**
- **K-Wire, Blunt Tip Ø 1.1 (H293)**

General Control

- **Do the contents of the container correspond to the kit profile?**
- **Are the instruments intact (not clearly damaged)?**
- **Is the laser marking legible/the data matrix code visible?**
  - Instruments where the laser marking is no longer legible must be replaced.
  - Instruments where the data matrix code (UDI) is no longer visible must be replaced. (When available, a scanner can be used to check the data matrix code.)

- **Movable parts/joints – maintenance using surgical instrument oil!**

  → **Functional inspections for instruments** (see following pages)

- **If an instrument is replaced, all tests involving this instrument have to be repeated.**
- **Instructions for Reprocessing: 0240US, 0252US, 0267US**

Functional Inspection

- **Awl (42-510) and Thoracic Probe, Straight (42-535)**
  - Check tips, no obvious damage and bending pointed tips

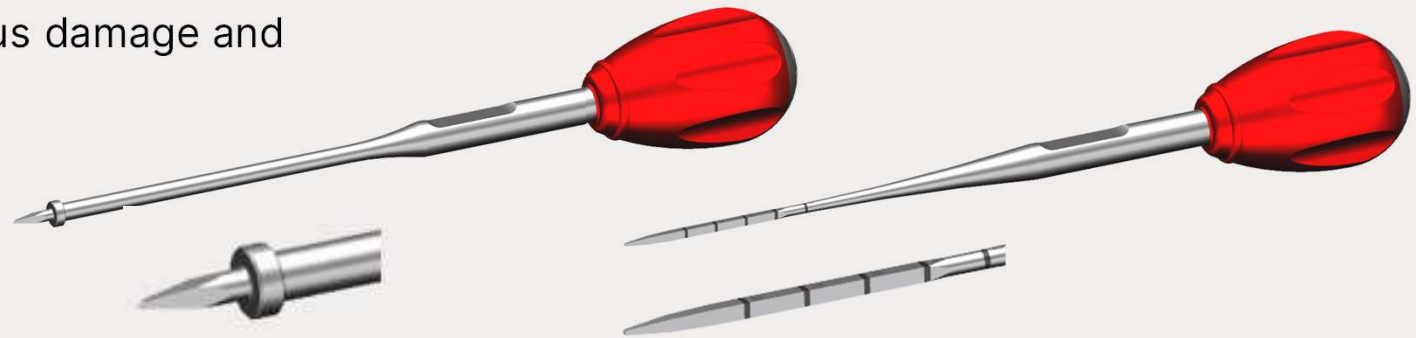

42-510

42-535

- **Pedicle Access Needle (42-515) and Pedicle Access Needle Wire (42-516)**
  - Check tips
  - Check whether cannulation is free
  - Functional inspection (insert wire in access needle)

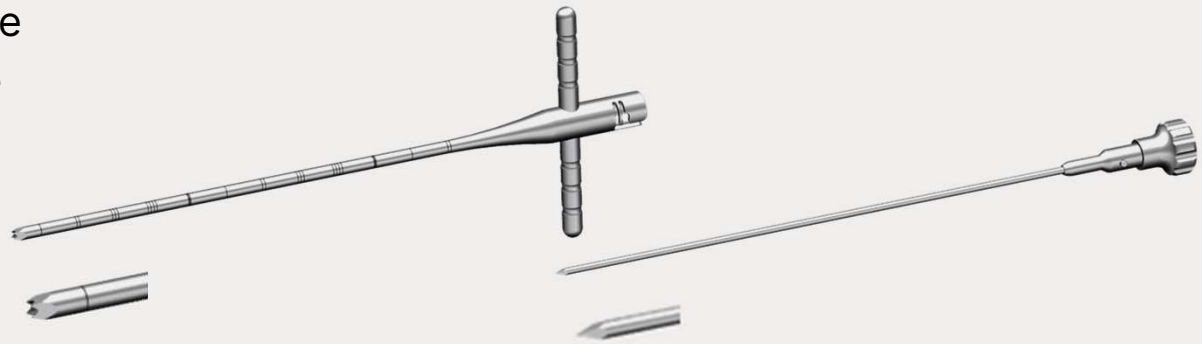

42-515

42-516

Functional Inspection

- **ALL Palm Handles, Ratchet, ¼“ Coupling (42-741; Optional 42-743) and ALL T-Handles, Ratchet, ¼“ Coupling (42-731; Optional 42-733)**
  - Movable parts/joints – maintenance using surgical instrument oil!
  - Check ratchet function left and right, e.g. with nut screw inserter (42-650)
  - Functional inspection of the ¼“ coupling, e.g. with cannulated tap (42-621)

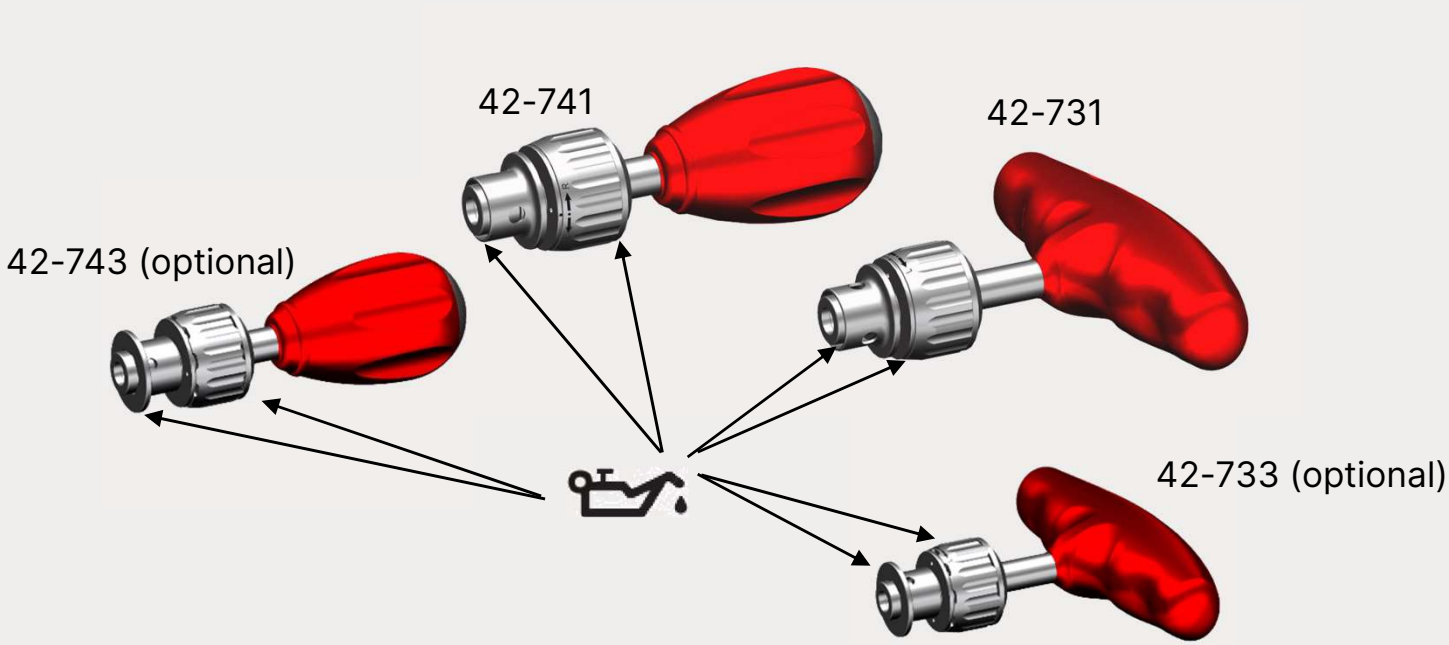

Cannulated Tap (42-611, 42-621, 42-631, 42-641)

- Is the tip deformed?
- For 42-611: check with K-wire, blunt tip Ø 1.1 (H293), while handle is attached, whether cannulation is free
- For 42-621, 42-631, 42-641: check with K-wire, threaded Ø 1.6 (H289), while handle is attached, whether cannulation is free
- Is the thread still sharp-edged?
- Functional inspection of the ¼“ coupling with palm handle or T-handle (42-741 or 42-731)

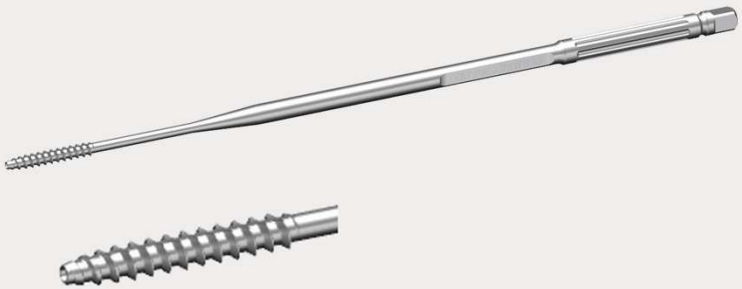

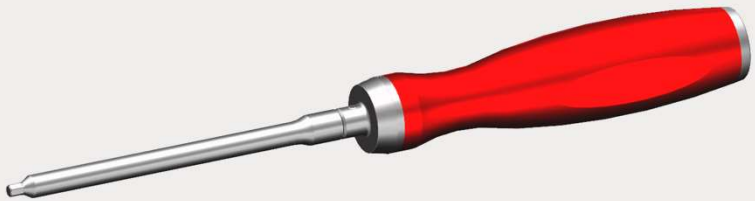

Cross-Link Screwdriver (42-595)

- Hex is still intact (no significant signs of wear)

Functional Inspection

- **ALL Nut Screw Inserters (42-650)**
  - Check whether the nut screw (H287) can be picked up neatly and whether it is self-holding (shake test)

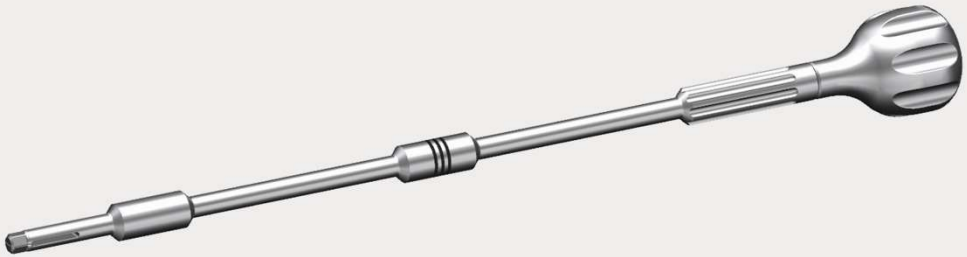

- **Forceps (42-500)**
  - Movable parts/joints – maintenance using surgical instrument oil!
  - Can be moved and engaged with low friction

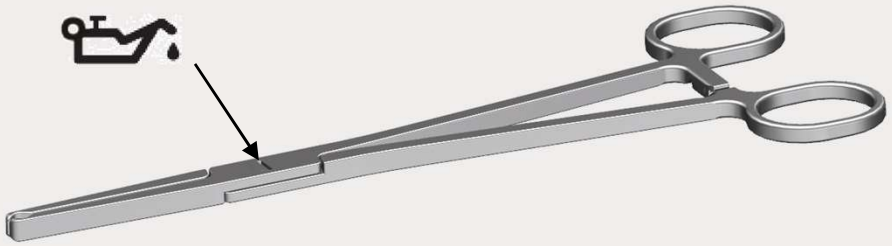

- **ALL Polyaxial Screwdrivers, Cannulated, T20 (42-691)**
  - Check K-wire, threaded Ø 1.6 (H289) whether cannulation is free
  - Disassemble and assemble screwdriver (according to instructions for reprocessing 0240 US)
  - Functional inspection of the ¼“ coupling with palm handle or T-handle (42-741 or 42-731)
  - PEEK sleeve holds entire instrument weight via spring strap
  - The screw Ø 5.5 × 45 mm (H286) can be mounted rigidly and straight

Hold with own weight to be sure it does not fall off

Functional Inspection

- **ALL Polyaxial Screwdrivers, Cannulated, T20 (42-691)**
  - Check with K-wire, threaded Ø 1.6 (H289) whether cannulation is free
  - Disassemble and assemble screwdriver (according to instructions for reprocessing 0240 US)
  - Functional inspection of the ¼“ coupling with palm handle or T-handle (42-741 or 42-731)
  - PEEK sleeve holds entire instrument weight via spring strap
  - The screw Ø 5.5 × 45 mm (H286) can be mounted rigidly and straight

Hold with own weight to be sure it does not fall off

as of LOT 19/01

as of LOT 21/01

- Magnetic plate holds its own weight in both positions
- Teeth from the magnetic plate as well as from the handwheel are not worn out

as of LOT 21/01

Functional Inspection

- **Torque Wrench, Hudson Coupling 12 Nm (42-702; Optional 42-703)**
  - Movable parts/joints – maintenance using surgical instrument oil!
  - Functional inspection of the Hudson coupling with the nut screw final driver (42-660)
  - Check the torque with the Sauter DB 20-3 testing device in accordance with instruction D00-005-910

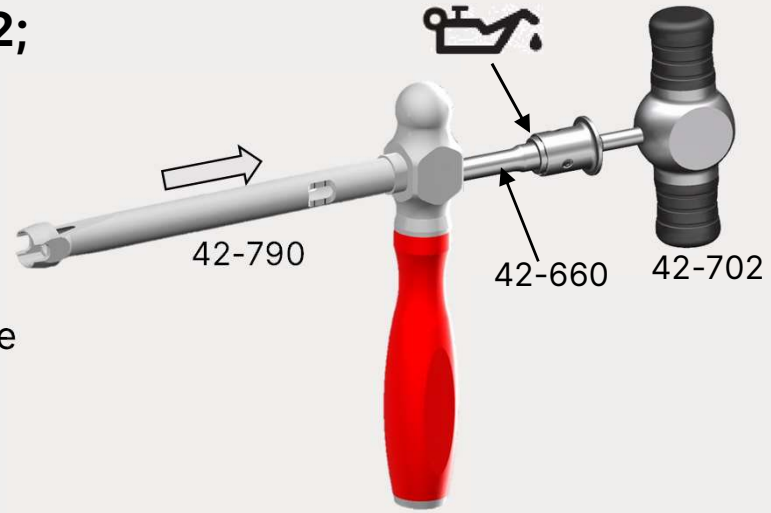

42-703 (optional)

Counter Torque Wrench (42-790)

- Counter torque wrench can be slid over nut screw final driver (42-660)
- Check interface to tulip of a screw Ø 5.5 × 45 mm (H286; tulip must be able to be inserted without resistance and should fall out again)

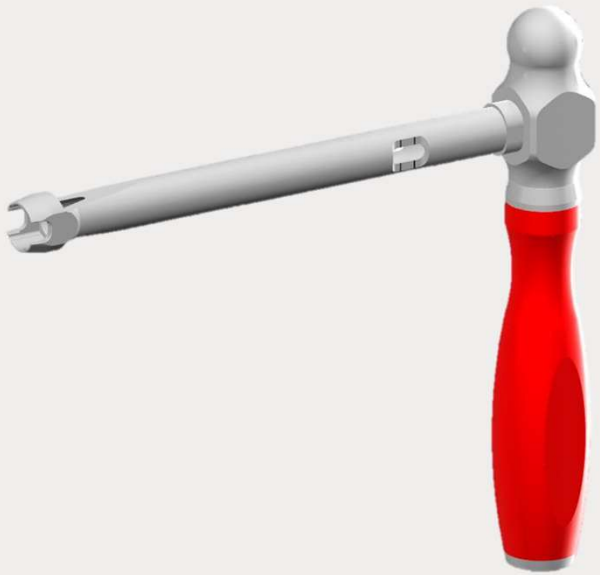

Nut Screw Final Driver, Hudson Coupling (42-660)

- Hex is still intact (no significant signs of wear)
- Can it be inserted into counter torque wrench (42-790)

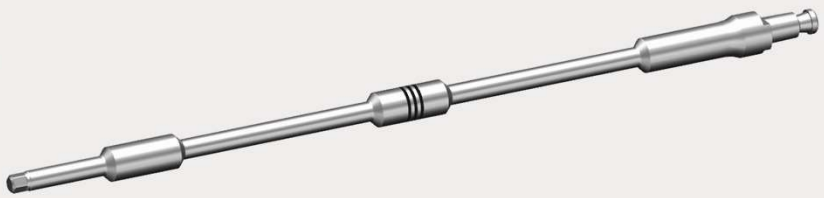

Functional Inspection

- **ALL Persuaders Inline (42-820)**
  - Movable parts in the area of the clamping lever's surface of the component (42-820-2) – maintenance using surgical instrument oil according to illustration!
  - Can be screwed in and out with low friction
  - In preparation for sterilization, the persuader inline is placed in the container in a disassembled condition
  - Check to see if persuader inline holds screw Ø 5.5 × 45 mm (H286)
  - Check for bent out wings when persuader inline is disassembled:

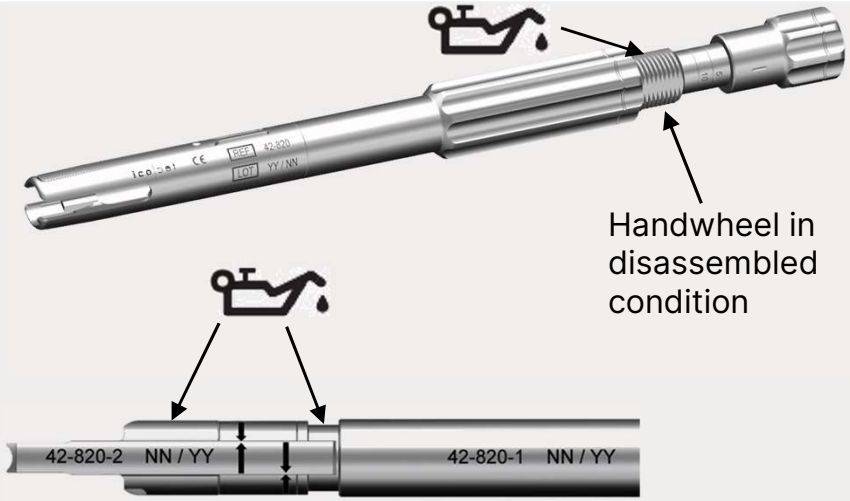

Good part

Reject part

Functional Inspection

- **Torque Increaser for Persuader Inline (42-825)**
  - Can be mounted on persuader inline (42-820)

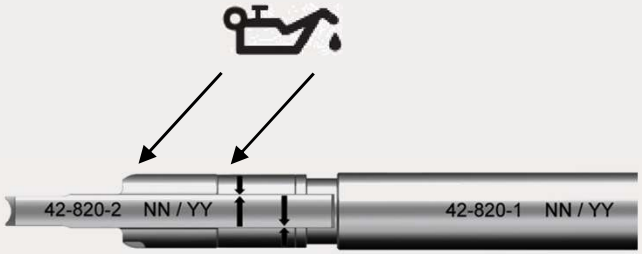

- **Pedicle Tester, Curved and Straight (42-560, 42-550)**
  - Check curvature with drawing 002683 with 100 % scaling and, if necessary, bend accordingly
  - The straight pedicle tester must not be bent

Functional Inspection

- **K-Wires, Ø 1.6 × 472 mm (42-544), Ø 1.1 × 472 mm (42-541)**
  - All K-wires are not visually bent

- **K-Wire, Ø 1.6 × 150 mm (42-545)**
  - All K-wires are not visually bent

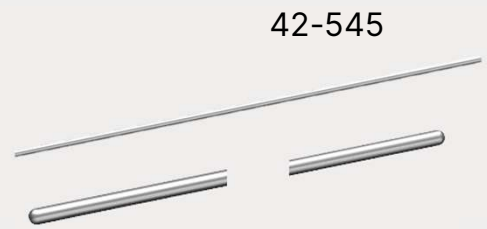

Functional Inspection

- **K-Wires, Optional, Nitinol, Ø 1.6 × 472 mm (42-546), Ø 1.1 × 472 mm (42-542)**
  - All K-wires are not visually bent

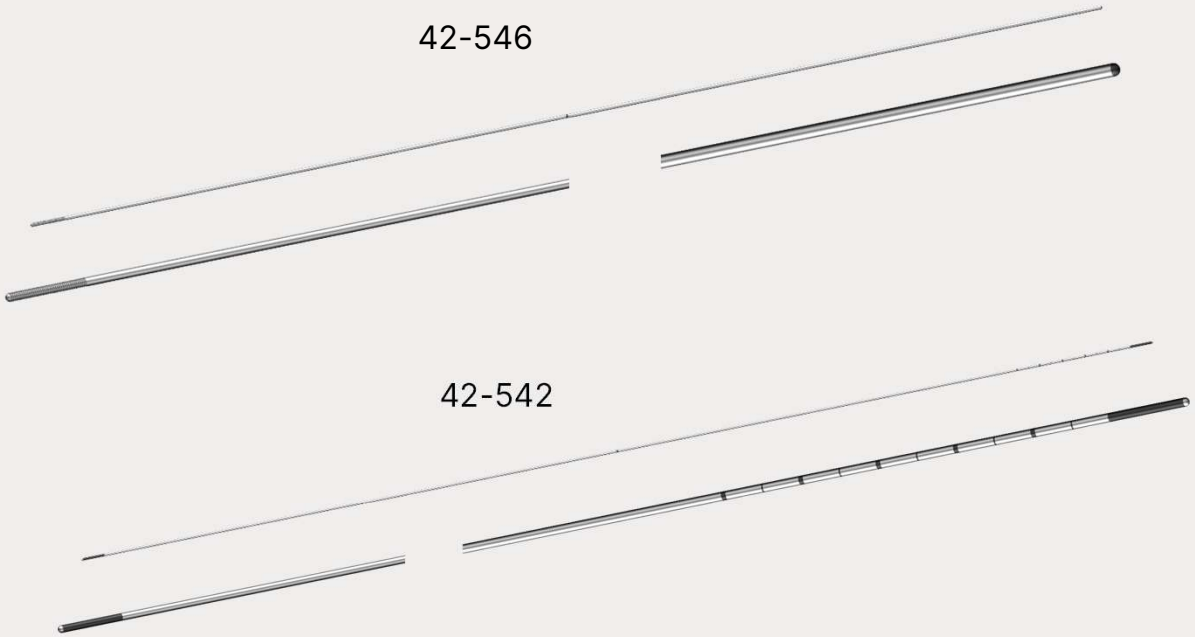

Functional Inspection

- **K-Wire Dispenser, Long and Short (42-880 and 42-885)**
  - Lids can be dismantled/mounted
  - K-wire dispenser, short: count number, refill if necessary (10 pieces)
  - K-wire dispenser, long: count number, refill if necessary (total 20 pieces; 10 pieces of Ø 1.1 mm and Ø 1.6 mm each)

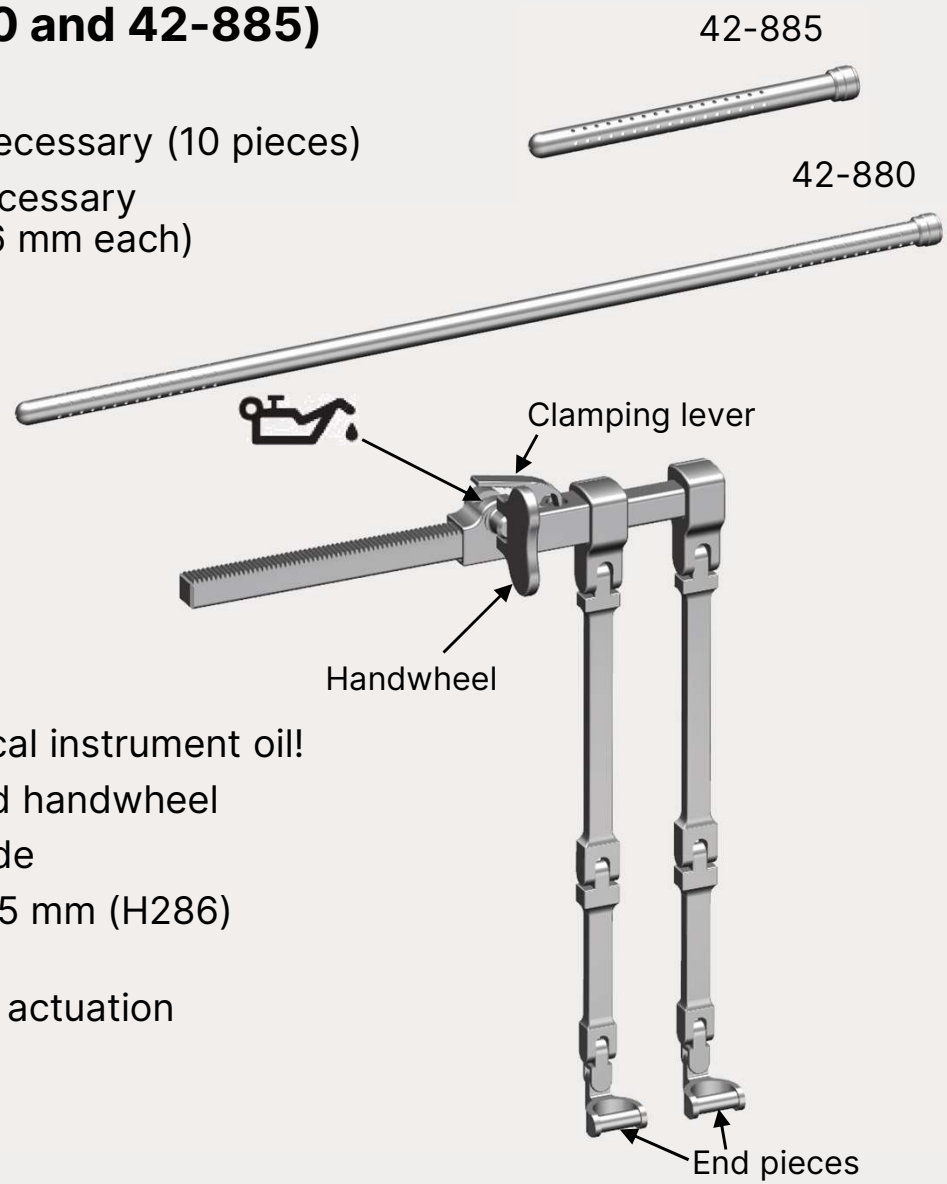

- **Parallel Distractor (42-775, Optional)**
  - Movable parts/joints – maintenance using surgical instrument oil!
  - Sliding arm can be moved by clamping lever and handwheel
  - Handwheel can be rotated and flipped to the side
  - Functional inspection: tulip of a screw Ø 5.5 × 45 mm (H286) can be picked up at end pieces
  - Clamping lever springs back automatically after actuation

Functional Inspection

- **Persuader (42-811, Optional)**
  - Movable parts/joints – maintenance using surgical instrument oil!
  - Handles can be operated and the sleeves can be moved freely against each other
  - Persuader can be disassembled and assembled (according to instructions for reprocessing 0240 US)
  - Functional inspection with tulip of a screw Ø 5.5 × 45 mm (H286; tulip can be picked up, blocked, and released again)

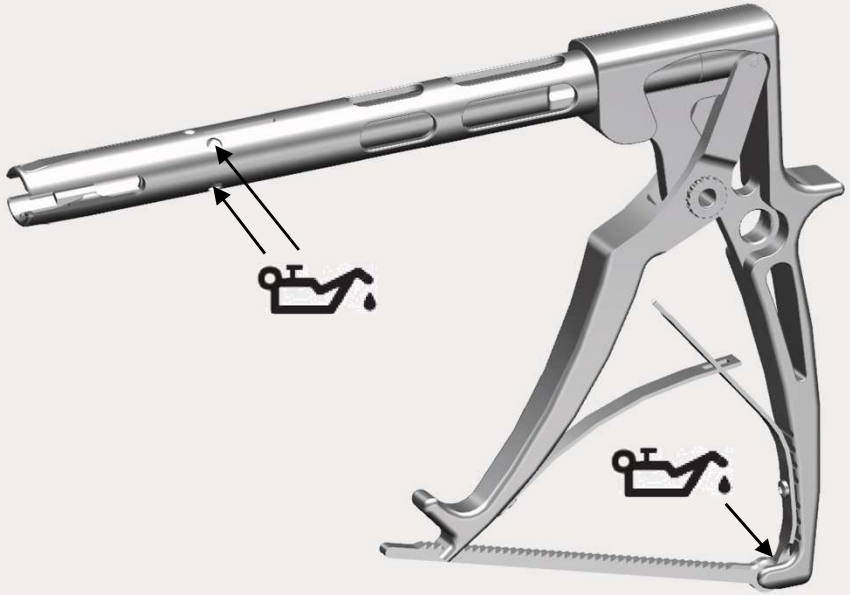

- **French Rod Bender (42-735)**
  - Movable parts/joints – maintenance using surgical instrument oil!
  - Handles can be moved
  - “Sid’s nose” locks in all 3 positions

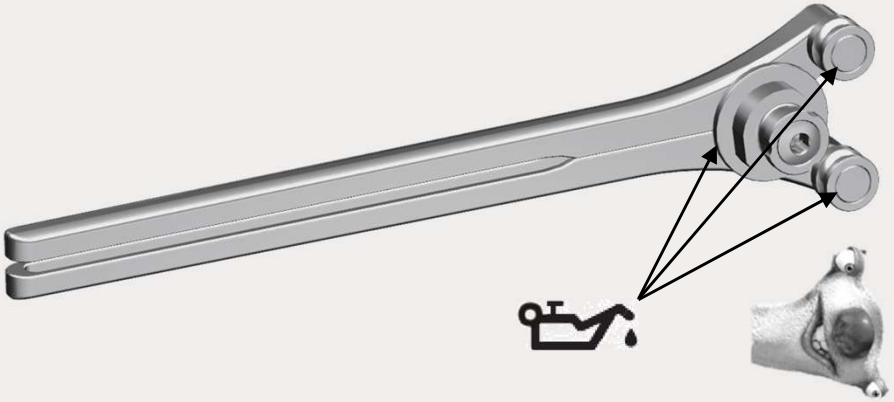

Functional Inspection

- **Screw Compressor (42-761) and Screw Distractor (42-771)**
  - Movable parts/joints – maintenance using surgical instrument oil!
  - Handles can be operated – **Attention, fingers!**
  - Toothed rod can be swiveled and presses actively against the handle with a spring

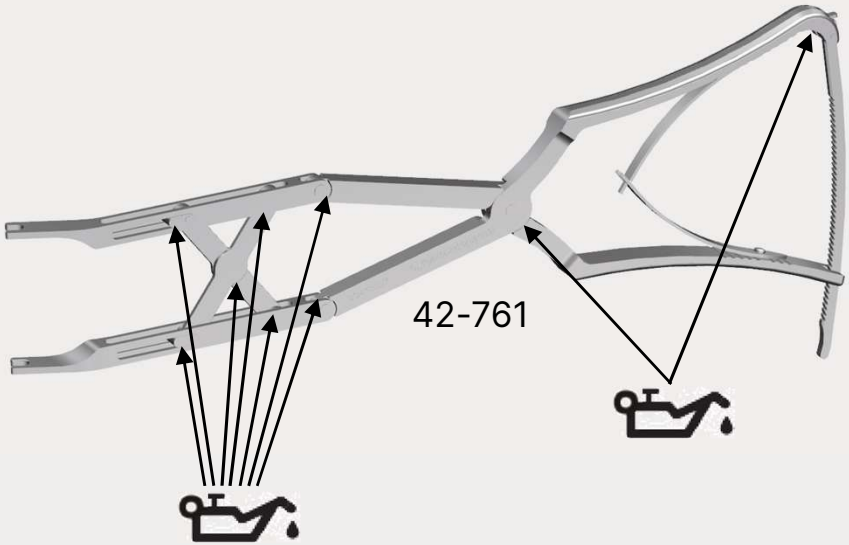

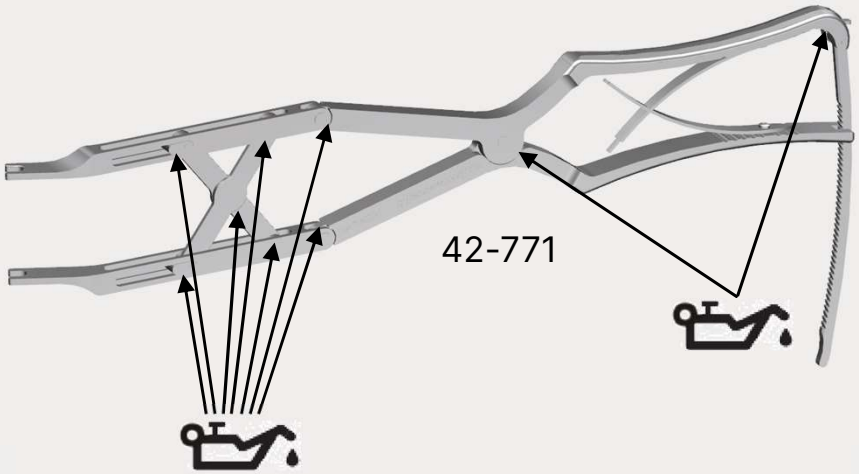

- **Rod Gripper (42-740)**
  - Movable parts/joints – maintenance using surgical instrument oil!
  - Sleeve can be adjusted

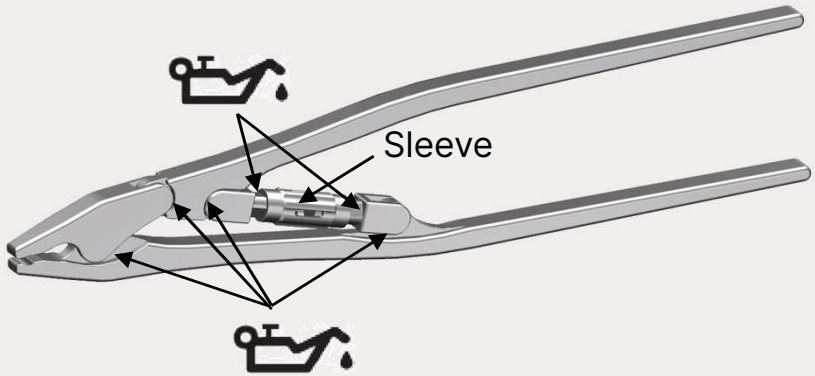

Appendix

- Drawing 002683

0247US.2025-06